ATEX INTERCOM II2G / II2GD
Master station UNI3G - 15 Watts

TLH214AG3 / AG3D

TELEPHONES LE LAS
Tel:.....(33) 1 48.76.62.62
Fax:.....(33) 1 48.76.83.04
E-mail:.....lelas@lelas.fr
Web-site:.....**www.lelas.fr**

Drawing

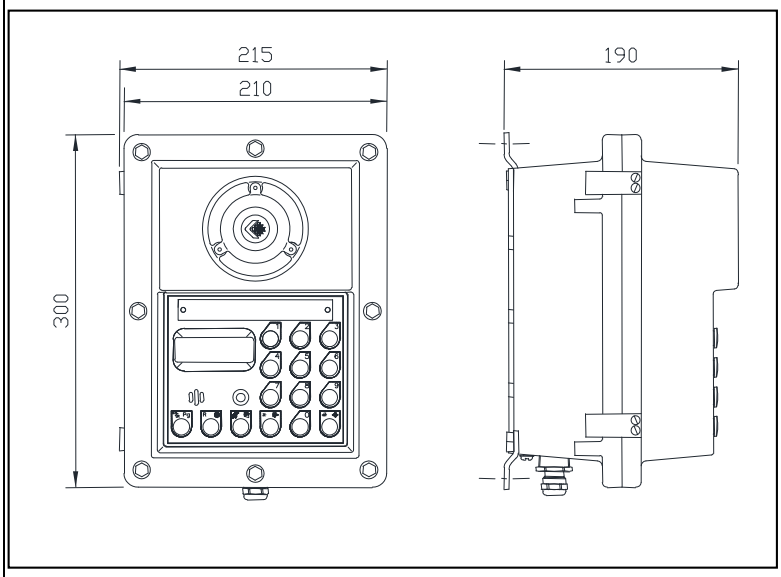

Electrical characteristics

Supply voltage:	24 Vdc or 48 Vdc
Max consumption:	<450 mA
Rest consumption:	40 mA
Maximum operating voltage:	54V
Max power dissipation * :	15 Watts *
Flashing/Ground :	none
Audible call signal:	>100 dB / 1 m.
Visual call signal:	external option
Conversation mode:	hands-free controlled

* inside the enclosure is ⩽ 50 watts

ATEX Certification
Ex II2G or II2GD
Ex II2G / Ex db IIB T6 Gb - (Zone 1 / 2)
Ex II2GD / Ex tb IIIC T85°C Db IP6X - (Zone 21 / 22)

References :
TLH 214 AG3 - II2G (gas) – **24Vcc**
TLH214 AG3D - II2GD (gas and dust) - 24Vcc

TLH 214 AG3CC - II2G (gas) – **48Vcc**
TLH214 AG3DCC -II2GD (gas and dust) – 48Vcc

TLH 214 AG3CA - II2G (gas) – **230Vca**
TLH214 AGD3CA -II2GD (gas and dusts) – 230Vca

Material / Colour :.....Aluminium / RAL2003
Microphone:..... type with sealed electret
Loudspeaker :.....15 watts compression chamber motor
Mounting:..... 3-point wall mount
Connection :.....on plug connector
Cable type :.....single/multi-stranded wires max section 1.5mm²
Cable entry :.....type Ex d - 3/4NPT for cable Ø7 to Ø12mm
Dimensions :.....215 X 300 X 190 mm
Weight :.....8,6 kg
Specific marking :.....II2G (Gas) or II2GD (Gas and dust)
Additional marking :.....Ex db IIB T6 Gb - gas (group IIB)
or Ex db IIB+H2 T6 Gb - gas (group IIB+H2)
Ex tb IIIC T85°C Db IP6X - gas and dust (group IIB)
Ambient operating temperature:.....Tamb. -20°C to +50°C
EU Type Examination Certificate :.....INERIS 03ATEX0238X
Certificate of conformity :.....IECEx INE 20.0071X

SET-UP / USAGE
INITIAL COMMISSIONING MUST BE CARRIED OUT BY A COMPANY COMPETENT IN INSTALLATIONS IN HAZARDOUS AREAS.
The allowing instructions must be read in conjunction with :
1- standard NF C 15 100.
2- Europeen ATEX 2014/34/EU and annexes
3- standard EN 60079-14 (electrical installations in gaseous explosive atmospheres).
4- standard EN 60079-17 (inspection and maintenance in hazardous environments).
5- Decrees, orders laws directive, applications circulars, standards, rule book and every other document regarding the location of its installation.
6- EN 61241-14 : Installation and selection
7- EN 61241-17: Inspection and maintenance of electrical installations located in hazardous locations (other than mines).

Failure to comply with these does not engage our responsibility. The installation of the equipment must be carried out by qualified, competent and authorized personnel. Check the compatibility between the information on the nameplate, the explosive atmosphere present, the area of use and the ambient and surface temperatures.

This equipment comes with a 2-year parts and labour warranty ex works.

TELEPHONES LE LAS reserves the right to alter specifications without notice.

Ed.B - 17.06.2024

APPROUVÉ